Combination Tools — Application Examples Using the BF Tool

To quote a special tool, please contact our Custom Solutions department.

drilling, chamfering, and facing a cast bracket

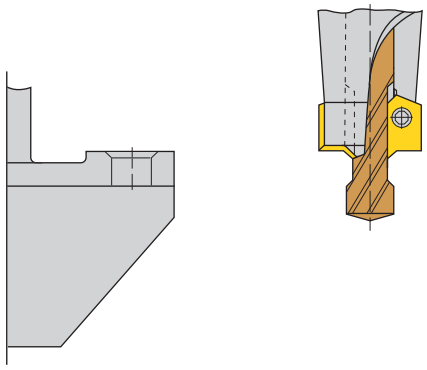

countersinking for countersunk head screws

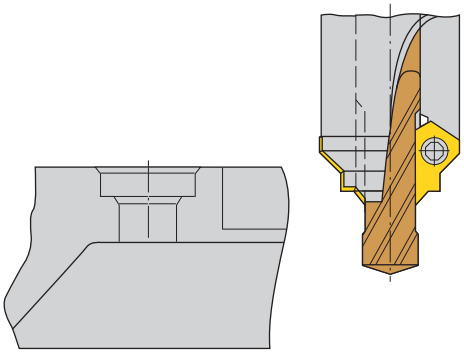

tapped hole with protection countersinking

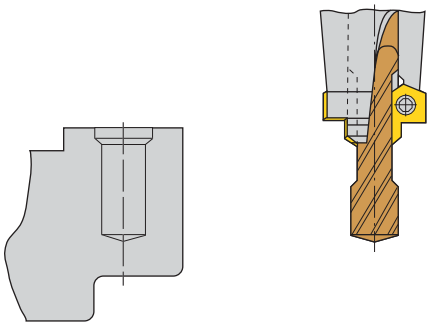

centering with protection countersinking

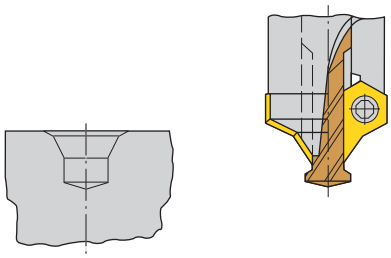

60° countersinking and plane surface with corner radius

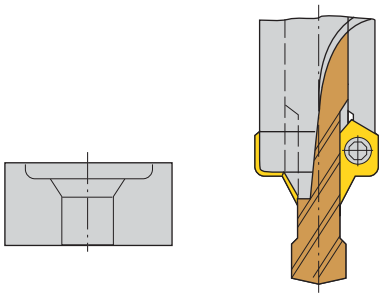

countersinking for round sealing rings

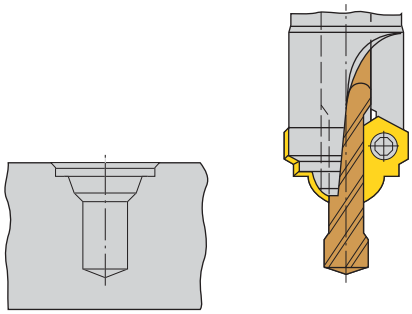

countersinking for aluminum rim

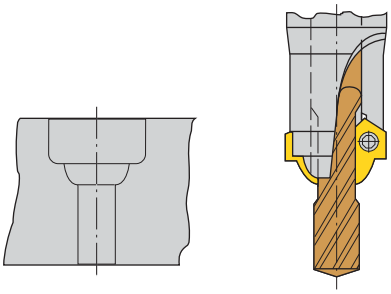

drilling and facing

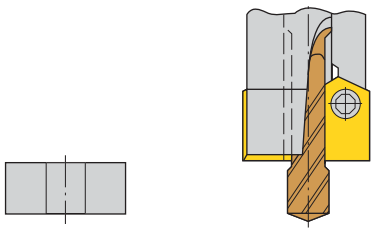

To place an order, contact Kennametal or your authorized Kennametal distributor, or visit www.kennametal.com.

Combination Tools — SEFAS Assembly Instructions and Torque Values

1) Mount the drill into the basic body “A.” Use A-style round shanks only. Do not use F-style with clamping flat.

2) Mount inserts into pockets “B.”

3) Adjust to required drilling depth using axial adjustment screw “1.”

4) Rotate drill so that the inserts are behind the margin. Inserts should be aligned on the margin clearance, not the flute.

5) Tighten both clamping elements “C” with a torque wrench to specified requirements (see chart below). Preset slots should be set parallel to shank. Use a flathead screwdriver to align preset slots.

6) Press the insert against the drill and tighten the insert clamps. There will be a slight gap between drill and insert if tightened to correct torque specifications.

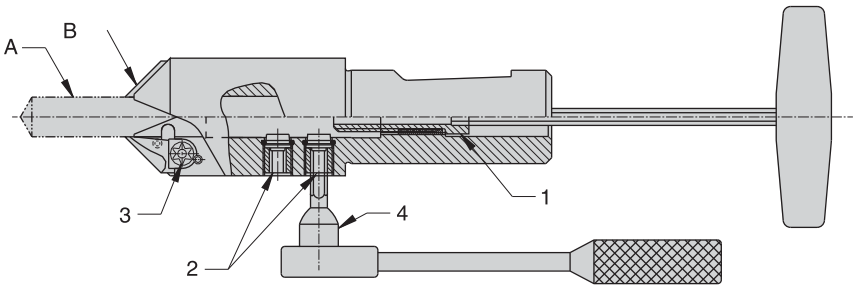

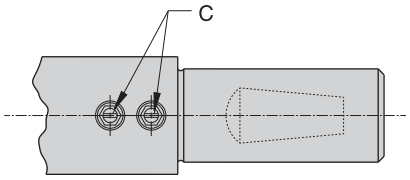

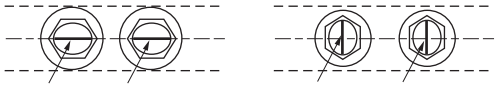

preset slots
correct alignment

preset slots
incorrect alignment

Inch

D1	1 axial adjustment screw	2 drill clamp screw	drill clamp torque Nm	drill clamp torque ft-lbs	3 insert clamp	insert clamp torque Nm	insert clamp torque ft-lbs	4 wrench adapter
.156 - .188	360.516	360.650	7	5.2	360.550	2	1.5	170.240
.188 - .250	360.510	360.651	8	5.9	360.550	2	1.5	170.240
.250 - .313	360.510	360.652	8	5.9	360.550	2	1.5	170.240
.313 - .375	360.510	360.653	10	7.4	360.550	2	1.5	170.232
.375 - .438	360.513	360.654	15	11.1	360.551	4	3.0	170.232
.438 - .500	360.513	360.655	15	11.1	360.551	4	3.0	170.232
.500 - .563	360.511	360.656	20	14.8	360.551	4	3.0	170.233
.563 - .625	360.511	360.657	30	22.1	360.551	4	3.0	170.233
.625 - .688	360.511	360.658	45	33.2	360.551	4	3.0	170.234
.688 - .750	360.511	360.659	5	33.2	360.551	4	3.0	170.234

Metric

D1	1 axial adjustment screw	2 drill clamp screw	drill clamp torque Nm	drill clamp torque ft-lbs	3 insert clamp	insert clamp torque Nm	insert clamp torque ft-lbs	4 wrench adapter
4,0 - 6,0	360.510	360.650	7	5.2	360.550	2	1.5	170.240
6,0 - 8,0	360.510	360.651	8	5.9	360.550	2	1.5	170.240
8,0 - 10,0	360.510	360.652	10	7.4	360.550	2	1.5	170.232
10,0 - 12,0	360.513	360.653	15	11.1	360.551	4	3.0	170.232
12,0 - 14,0	360.511	360.654	20	14.1	360.551	4	3.0	170.233
14,0 - 16,0	360.511	360.655	30	22.1	360.551	4	3.0	170.233
16,0 - 18,0	360.511	360.633	45	3.23	360.551	4	3.0	170.234

Best Tool Selector — Hole Finishing/Tapping — Non-Ferrous Metals — N2

Cast Aluminums	• **Content: Si<12.2%**	• **Tensile Strength RM (MPa)*: <350**	• **Hardness (HB): 70-100**
Cutting Groups	• 23, 24		

Type	Geometry	Grade	Ref. Pg. No.	Diameter Range Inch	Diameter Range Metric (mm)	Starting Value sfm / m/min	Range sfm: 98, 164, 262, 328, 394, 492, 656, 820, 984, 1148, 1640, 2460, 3281 / m/min: 30, 50, 80, 100, 120, 150, 200, 250, 300, 350, 500, 750, 1000	FEED RATE ipr / mm/r
							CUTTING SPEED	
Boring — Medium Finishing ▼▼								
Dial Set	CPGM… SPGH…	KC5410	G112	1.375"- 6.500"	34,93mm-165,10mm	1805 550	328–3281 100–1000	.006 - .016 0,16 - 0,40
	CPGM…	K313		1.375"- 6.500"	34,93mm-165,10mm	853 260	328–1969 100–600	.006 - .016 0,25 - 0,40
Modbore	CNGP….	KC5410	G8	.384" – 25.787"	9,70mm – 655,00mm	1805 550	328–3281 100–1000	.006 -.016 0,16 - 0,40
Boring — Finishing ▼▼▼								
ModBore	CCGT…HP CCGT…LF	KC5410	G14	.384" – 25.787"	9,70mm – 655,00mm	1805 550	328–3281 100–1000	.004 -.016 0,10 - 0,40
Boring — Fine Finishing ▼▼▼▼								
Romicron**	CPGT…HP CPGT…LF	KC5410	G50	.157"- 8.110"	4,00mm – 213,00mm	1805 550	328–3281 100–1000	.002 - .008 0,06 - 0,20
Kendex Precision	BPGX…LHP	K313	G122	.299"- .996"	5,8mm – 25,3mm	525 160	591–656 180–200	.002 - .004 0,06 - 0,10
Tapping								
Solid Carbide Taps – Through Holes	T461, T481	KC7512	D2	—	—	394 120	262–623 80–190	—
Solid Carbide Taps – Blind Holes	T471, T491	KC7512	D2	—	—	279 85	197–427 60–110	—

* 1 MPa = 145 psi
For more information on insert selection see KMT Lathe Tooling Catalog.

**Diameter Range for Romicron represents standard product offering shown within current catalog. Romicron custom solutions can be manufactured for an unlimited hole diameter size. For more information, contact your local KMT representative.